META META PURE Single-lever basin mixer with raised base without pop-up waste - Matte Black

33 534 665

- 201mm projection
- progressive cartridge
- pivotable spout 360°
- circular, air-enriched flow
- height of mixer 397 mm
- height up to aerator 299 mm
- hole diameter 35 mm
- 2x screw-in M 8 x 1 pressure hose, leak-tested
- max. flow 5.7 l/min
- lead-free
- This product can help a building meet the requirements of Green Building Rating Systems, e.g. LEED®, BREEAM®, DGNB
- WRAS

for use on countertop bowls

META META PURE Single-lever basin mixer with raised base without pop-up waste - Matte Black

33 534 665

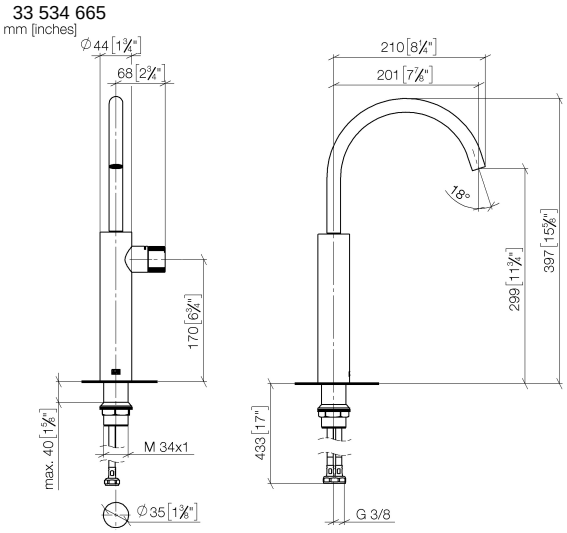

Flow rate chart

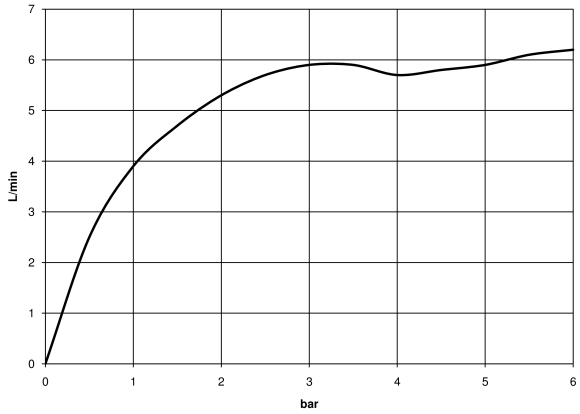

Codes & Standards

DIN 4109	ISO 3822	Scottish Water Byelaws	UK Water Supply Regulations

Ü-Zeichen

META META PURE Single-lever basin mixer with raised base without pop-up waste - Matte Black

33 534 665

Certificates

LGA_29	WRAS_2004

META META PURE Single-lever basin mixer with raised base without pop-up waste - Matte Black

33 534 665

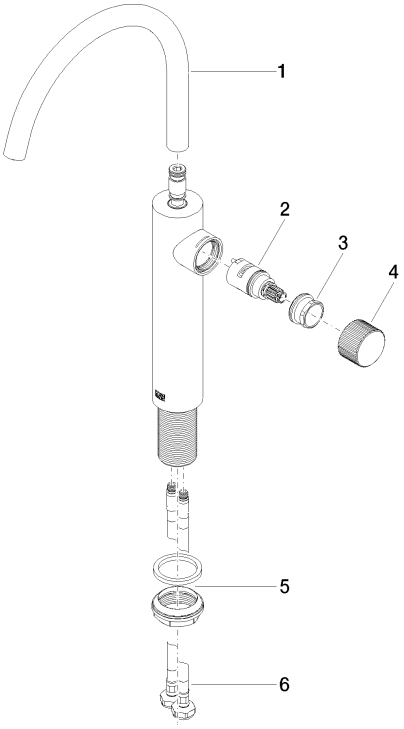

Spare parts list

No.	Item Number	Name	Quantity used	Delivery time
1	90 28 22 313 00-33	spout	1	30
2	90 90 03 169 00 90	top	1	2
3	09 24 04 528 90	nut	1	60
4	09 20 66 011-33	handle	1	30
5	04 23 10 044 07 90	fixing set	1	2
6	04 30 04 101 00 90	hose	2	2

We reserve the right to change designs, product range and technical specifications without prior notice.
More information can be found at: www.dornbracht.com +49 (0) 2371 8899 900 mail@dornbracht.com